CYLINDRICAL LENSES

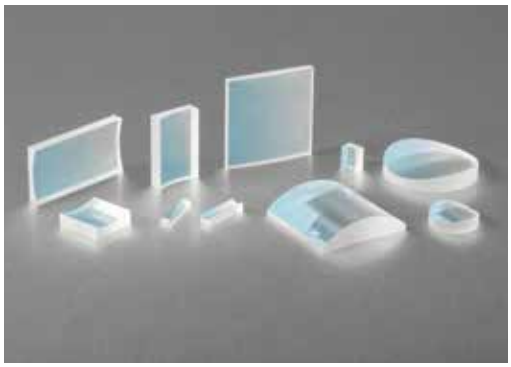

Cylindrical lenses are used to condense, focus or expand light in a single dimension. Typical applications include laser scanners, holography, optical information processing/computing, spectroscopy, dye lasers, and scanning confocal microscopy. CVI Laser Optics' cylindrical lenses are manufactured with precision and are quality-controlled to deliver guaranteed performance in a wide array of industrial, OEM, and research applications, particularly at high laser power.

SELECTION GUIDE 64

LASER GRADE PLANO-CONVEX LENSES 65

LASER GRADE PLANO-CONCAVE LENSES 70

Don't see exactly what you are looking for?

CVI Laser Optics specializes in prototype to volume production manufacturing!

Give us a call and we will be honored to assist you with your custom needs.

波威科技

NOTES:

客服微信

SELECTION GUIDE

PRODUCT TYPE	SURFACE QUALITY	WAVELENGTH RANGE	OPERATING CONDITIONS	PAGE
Plano-Convex Cylindrical Lenses				
LASER GRADE FUSED SILICA RECTANGULAR: RCX-UV	20-10	193 – 2100nm	High Energy Lasers, 10 J/cm², 20ns, 20Hz at 1064nm	65
LASER GRADE N-BK7 SQUARE: SCX-C	20-10	380 – 2100nm	High Energy Lasers, 10 J/cm², 20ns, 20Hz at 1064nm	66
LASER GRADE FUSED SILICA SQUARE: SCX-UV	20-10	193 – 2100nm	High Energy Lasers, 10 J/cm², 20ns, 20Hz at 1064nm	67
LASER GRADE FUSED SILICA ROUND: CLCX-UV	20-10	193 – 2100nm	High Energy Lasers, 10 J/cm², 20ns, 20Hz at 1064nm	69
Plano-Concave Cylindrical Lenses				
LASER GRADE FUSED SILICA RECTANGULAR: RCC-UV	20-10	193 – 2100nm	High Energy Lasers, 10 J/cm², 20ns, 20Hz at 1064nm	70
LASER GRADE N-BK7 SQUARE: SCC-C	20-10	380 – 2100nm	High Energy Lasers, 10 J/cm², 20ns, 20Hz at 1064nm	71
LASER GRADE FUSED SILICA SQUARE: SCC-UV	20-10	193 – 2100nm	High Energy Lasers, 10 J/cm², 20ns, 20Hz at 1064nm	72
LASER GRADE FUSED SILICA ROUND: CLCC-UV	20-10	193 – 2100nm	High Energy Lasers, 10 J/cm², 20ns, 20Hz at 1064nm	73

波威科技

LASER GRADE FUSED SILICA RECTANGULAR CYLINDRICAL PLANO-CONVEX LENSES: RCX-UV

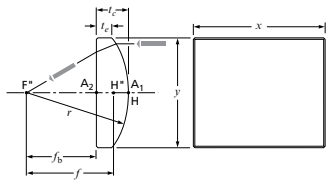

Rectangular cylindrical plano-convex lens

Specifications

Product Code: RCX-UV

Optical Material:
Standard Grade Corning 7980 1-D (Fused Silica)

Design Wavelength: 248nm

Dimensional Tolerance: +0/-0.25mm

Thickness Tolerance: ±0.25mm

Radius of Curvature Tolerance: ±0.5%

Chamfer: 0.35mm leg width at 45° nominal

Wedge: ≤ 3 arc minutes

Surface Quality: 20-10 scratch-dig per MIL-PRF-13830b

Surface Figure:
Cylindrical side: < 1.0 λ (y-axis),
< 1.0 λ/cm (x-axis), p-v at 633nm
Plano side: < λ/4 p-v at 633nm

Clear Aperture (CA): ≥ 85% of central dimension

Anti-reflection Coating: Wavelength user specified
Narrowband: R ≤ 0.25% per surface
Broadband: R_{avg} ≤ 0.5% per surface
Dualband: R ≤ 0.3% at 1064, R ≤ 0.6% at 532 per surface

Damage Threshold: 10 J/cm², 20ns, 20Hz at 1064nm

BUILD YOUR PART NUMBER

STEP-1	STEP-2
PRODUCT CODE	WAVELENGTH OF AR COATING (nm) for uncoated leave blank
RCX-40.0-25.4-30.5-UV	193

EXAMPLE: RCX-40.0-25.4-30.5-UV - 193

CHOOSE FROM THE OPTIONS BELOW.

1. PRODUCT CODE - SEE TABLE BELOW

2. WAVELENGTH OF AR COATING (nm); for uncoated leave blank

193	355-532	633-1064	1050-1600
248	400	700-900	1064/532
248-355	415-700	800	1550
266	532	1030	
355	633	1064	

LASER GRADE FUSED SILICA RECTANGULAR CYLINDRICAL PLANO-CONVEX LENSES

f (mm)	x (mm)	y (mm)	r (mm)	t_c (mm)	t_e (mm)	f/#	f_b (mm)	PRODUCT CODE
12.7	12.7	6.4	6.5	3.0	2.2	2.3	10.8	RCX-12.7-6.4-6.5-UV
20.0	12.7	6.4	10.2	3.0	2.5	3.7	18.1	RCX-12.7-6.4-10.2-UV
25.0	25.4	12.7	12.7	5.0	3.3	2.3	21.8	RCX-25.4-12.7-12.7-UV
30.0	40.0	25.4	15.3	11.0	4.2	1.4	23.0	RCX-40.0-25.4-15.3-UV
40.0	25.0	15.0	20.3	5.0	3.6	3.1	36.8	RCX-25.0-15.0-20.3-UV
40.0	40.0	20.0	20.3	6.0	3.4	2.4	36.2	RCX-40.0-20.0-20.3-UV
50.0	40.0	25.4	25.4	9.0	5.6	2.3	44.2	RCX-40.0-25.4-25.4-UV
60.0	40.0	25.4	30.5	7.0	4.2	2.8	55.5	RCX-40.0-25.4-30.5-UV
75.0	40.0	25.4	38.1	5.0	2.8	3.5	71.8	RCX-40.0-25.4-38.1-UV
100.0	40.0	25.4	50.9	5.0	3.4	4.6	96.8	RCX-40.0-25.4-50.9-UV
125.0	40.0	25.4	63.6	5.0	3.7	5.8	121.8	RCX-40.0-25.4-63.6-UV
150.0	40.0	25.4	76.3	5.0	3.9	6.9	146.8	RCX-40.0-25.4-76.3-UV
200.0	30.0	20.0	101.7	5.0	4.5	11.8	196.8	RCX-30.0-20.0-101.7-UV
200.0	40.0	25.4	101.7	5.0	4.2	9.3	196.8	RCX-40.0-25.4-101.7-UV
250.0	30.0	20.0	127.1	5.0	4.6	14.7	246.8	RCX-30.0-20.0-127.1-UV
250.0	40.0	25.4	127.1	5.0	4.4	11.6	246.8	RCX-40.0-25.4-127.1-UV
300.0	40.0	25.4	152.6	5.0	4.5	13.9	296.8	RCX-40.0-25.4-152.6-UV
400.0	40.0	25.4	203.4	5.0	4.6	18.5	396.8	RCX-40.0-25.4-203.4-UV
500.0	40.0	25.4	254.3	5.0	4.7	23.2	496.8	RCX-40.0-25.4-254.3-UV
750.0	40.0	25.4	381.4	5.0	4.8	34.7	746.8	RCX-40.0-25.4-381.4-UV
1000.0	40.0	25.4	508.6	5.0	4.8	46.3	996.8	RCX-40.0-25.4-508.6-UV

客服微信
波威科技

LASER GRADE N-BK7 SQUARE CYLINDRICAL PLANO-CONVEX LENSES: SCX-C

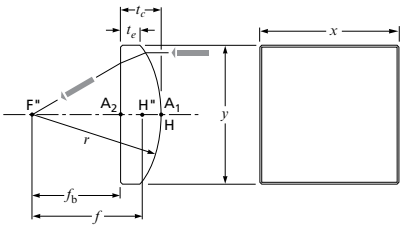

Square cylindrical plano-convex lens

Specifications

Product Code: SCX-C

Optical Material: N-BK7

Dimensional Tolerance: +0/-0.25mm

Thickness Tolerance: ±0.25mm

Radius of Curvature Tolerance: ±0.5%

Chamfer: 0.35mm leg width at 45° nominal

Wedge: ≤ 3 arc minutes

Surface Quality: 20-10 scratch-dig per MIL-PRF-13830b

Surface Figure:
Cylindrical side: < 1.0 λ (y-axis),
< 1.0 λ/cm (x-axis), p-v at 633nm
Plano side: < λ/4 p-v at 633nm

Clear Aperture (CA): ≥ 85% of central dimension

Anti-reflection Coating: Wavelength user specified
Narrowband: R ≤ 0.25% per surface
Broadband: R_{avg} ≤ 0.5% per surface
Dualband: R ≤ 0.3% at 1064, R ≤ 0.6% at 532 per surface

Damage Threshold: 10 J/cm², 20ns, 20Hz at 1064nm

BUILD YOUR PART NUMBER

STEP-1	STEP-2
PRODUCT CODE	WAVELENGTH OF AR COATING (nm) for uncoated leave blank
SCX-50.8-152.6-C	1064

EXAMPLE: SCX-50.8-152.6-C - 1064

CHOOSE FROM THE OPTIONS BELOW.

1. PRODUCT CODE - SEE TABLE BELOW

2. WAVELENGTH OF AR COATING (nm); for uncoated leave blank

400	633	800	1050-1600
415-700	633-1064	1030	1064/532
532	700-900	1064	1550

Please see page T-31 for Anti-Reflective Coating Traces.

波威科技

LASER GRADE N-BK7 SQUARE CYLINDRICAL PLANO-CONVEX LENSES

f (mm)	x = y (mm)	r (mm)	t_c (mm)	t_e (mm)	f/#	f_b (mm)	PRODUCT CODE
50.0	25.4	25.4	9.0	5.6	2.3	44.1	SCX-25.4-25.4-C
60.0	20.0	30.5	5.0	3.3	3.5	56.7	SCX-20.0-30.5-C
75.0	20.0	38.1	5.0	3.7	4.4	71.7	SCX-20.0-38.1-C
100.0	20.0	50.9	5.0	4.0	5.9	96.7	SCX-20.0-50.9-C
100.0	50.8	50.9	10.0	3.2	2.3	93.4	SCX-50.8-50.9-C
125.0	25.4	63.6	5.0	3.7	5.8	121.7	SCX-25.4-63.6-C
150.0	20.0	76.3	5.0	4.3	8.8	146.7	SCX-20.0-76.3-C
150.0	25.4	76.3	5.0	3.9	6.9	146.7	SCX-25.4-76.3-C
200.0	25.4	101.7	5.0	4.2	9.3	196.7	SCX-25.4-101.7-C
250.0	25.4	127.1	5.0	4.4	11.6	246.7	SCX-25.4-127.1-C
300.0	25.4	152.6	5.0	4.5	13.9	296.7	SCX-25.4-152.6-C
300.0	50.8	152.6	6.4	4.2	6.9	295.8	SCX-50.8-152.6-C
400.0	20.0	203.4	5.0	4.7	23.5	396.7	SCX-20.0-203.4-C
500.0	20.0	254.3	5.0	4.8	29.4	496.7	SCX-20.0-254.3-C
500.0	50.8	254.3	6.4	5.1	11.6	495.8	SCX-50.8-254.3-C
750.0	50.8	381.4	6.4	5.5	17.4	745.8	SCX-50.8-381.4-C
2000.0	50.8	1000.0	6.4	6.0	46.3	1995.8	SCX-50.8-1000.0-C
10000.0	50.8	5000.0	6.4	6.3	231.6	9995.8	SCX-50.8-5000.0-C

LASER GRADE FUSED SILICA SQUARE CYLINDRICAL PLANO-CONVEX LENSES: SCX-UV

Other focal lengths and dimensions available.
Contact us for pricing and delivery details.

- UV laser-line focusing
- Anamorphic beam shaping and laser projection
- Illumination of detector arrays
- Low loss, high energy AR coatings

Specifications

Product Code: SCX-UV

Optical Material:
Standard Grade Corning 7980 1-D (Fused Silica)

Design Wavelength: 248nm

Dimensional Tolerance: +0/-0.25mm

Thickness Tolerance: ±0.25mm

Radius of Curvature Tolerance: ±0.5%

Chamfer: 0.35mm leg width at 45° nominal

Wedge: ≤ 3 arc minutes

Surface Quality: 20-10 scratch-dig per MIL-PRF-13830b

Surface Figure:
Cylindrical side: < 1.0 λ (y-axis),
< 1.0 λ/cm (x-axis), p-v at 633nm
Plano side: < λ/4 p-v at 633nm

Clear Aperture (CA): ≥ 85% of central dimension

Anti-reflection Coating: Wavelength user specified
Narrowband: R ≤ 0.25% per surface
Broadband: R_{avg} ≤ 0.5% per surface
Dualband: R ≤ 0.3% at 1064, R ≤ 0.6% at 532 per surface

Damage Threshold: 10 J/cm², 20ns, 20Hz at 1064nm

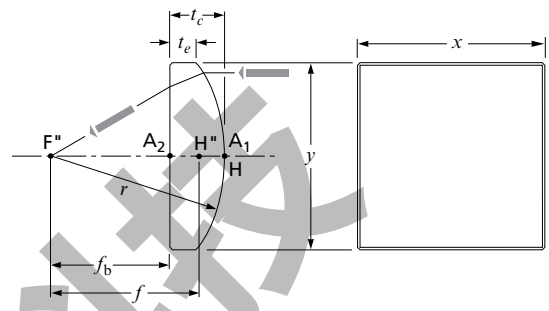

Square cylindrical plano-convex lens

BUILD YOUR PART NUMBER	
STEP-1	STEP-2
PRODUCT CODE	WAVELENGTH OF AR COATING (nm) for uncoated leave blank
SCX-50.8-152.6-UV	1064
EXAMPLE: SCX-50.8-152.6-UV - 1064	

CHOOSE FROM THE OPTIONS BELOW.

1. PRODUCT CODE - SEE TABLE ON NEXT PAGE

2. WAVELENGTH OF AR COATING (nm); for uncoated leave blank			
193	355-532	633-1064	1050-1600
248	400	700-900	1064/532
248-355	415-700	800	1550
266	532	1030	
355	633	1064	

Please see page T-31 for Anti-Reflective Coating Traces.

continued on next page

波威科技

客服微信

LASER GRADE FUSED SILICA SQUARE CYLINDRICAL PLANO-CONVEX LENSES

f (mm)	x = y (mm)	r (mm)	t_c (mm)	t_e (mm)	f/#	f_b (mm)	PRODUCT CODE
25.0	20.0	12.7	8.0	3.1	1.5	19.9	SCX-20.0-12.7-UV
40.0	15.0	20.3	5.0	3.6	3.1	36.8	SCX-15.0-20.3-UV
40.0	25.4	20.3	9.0	4.5	1.9	34.2	SCX-25.4-20.3-UV
50.0	25.4	25.4	9.0	5.6	2.3	44.2	SCX-25.4-25.4-UV
50.0	30.0	25.4	9.0	4.1	2.0	44.2	SCX-30.0-25.4-UV
60.0	25.4	30.5	7.0	4.2	2.8	55.5	SCX-25.4-30.5-UV
75.0	25.4	38.1	5.0	2.8	3.5	71.8	SCX-25.4-38.1-UV
75.0	30.0	38.1	7.0	3.9	2.9	70.5	SCX-30.0-38.1-UV
75.0	50.8	38.1	12.7	3.0	1.7	66.9	SCX-50.8-38.1-UV
100.0	20.0	50.9	5.0	4.0	5.9	96.8	SCX-20.0-50.9-UV
100.0	25.4	50.9	5.0	3.4	4.6	96.8	SCX-25.4-50.9-UV
100.0	50.8	50.9	10.0	3.2	2.3	93.6	SCX-50.8-50.9-UV
125.0	20.0	63.6	5.0	4.2	7.4	121.8	SCX-20.0-63.6-UV
125.0	25.4	63.6	5.0	3.7	5.8	121.8	SCX-25.4-63.6-UV
125.0	50.8	63.6	8.5	3.2	2.9	119.6	SCX-50.8-63.6-UV
150.0	20.0	76.3	5.0	4.3	8.8	146.8	SCX-20.0-76.3-UV
150.0	25.4	76.3	5.0	3.9	6.9	146.8	SCX-25.4-76.3-UV
150.0	50.8	76.3	8.0	3.6	3.5	144.9	SCX-50.8-76.3-UV
200.0	25.4	101.7	5.0	4.2	9.3	196.8	SCX-25.4-101.7-UV
200.0	50.8	101.7	6.4	3.1	4.6	195.9	SCX-50.8-101.7-UV
250.0	20.0	127.1	5.0	4.6	14.7	246.8	SCX-20.0-127.1-UV
250.0	25.4	127.1	5.0	4.4	11.6	246.8	SCX-25.4-127.1-UV
250.0	50.8	127.1	6.4	3.8	5.8	245.9	SCX-50.8-127.1-UV
300.0	25.4	152.6	5.0	4.5	13.9	296.8	SCX-25.4-152.6-UV
300.0	50.8	152.6	6.4	4.2	6.9	295.9	SCX-50.8-152.6-UV
400.0	20.0	203.4	5.0	4.7	23.5	396.8	SCX-20.0-203.4-UV
400.0	50.8	203.4	6.4	4.8	9.3	395.9	SCX-50.8-203.4-UV
500.0	20.0	254.3	5.0	4.8	29.4	496.8	SCX-20.0-254.3-UV
500.0	25.4	254.3	5.0	4.7	23.2	496.8	SCX-25.4-254.3-UV
500.0	50.8	254.3	6.4	5.1	11.6	495.9	SCX-50.8-254.3-UV
750.0	25.4	381.4	5.0	4.8	34.7	746.8	SCX-25.4-381.4-UV
750.0	50.8	381.4	6.4	5.5	17.4	745.9	SCX-50.8-381.4-UV
1000.0	20.0	508.6	5.0	4.9	58.8	996.8	SCX-20.0-508.6-UV
1000.0	25.4	508.6	5.0	4.8	46.3	996.8	SCX-25.4-508.6-UV
1000.0	50.8	508.6	6.4	5.7	23.2	995.9	SCX-50.8-508.6-UV
2000.0	50.8	1000.0	6.4	6.0	46.3	1995.9	SCX-50.8-1000.0-UV
10000.0	50.8	5000.0	6.4	6.3	231.6	9995.9	SCX-50.8-5000.0-UV

波威科技

LASER GRADE FUSED SILICA ROUND CYLINDRICAL PLANO-CONVEX LENSES: CLCX-UV

Other focal lengths and dimensions available. Contact us for pricing and delivery details.

- Anamorphic beam shaping and laser projection
- Illumination of detector arrays
- Low loss, high energy AR coatings

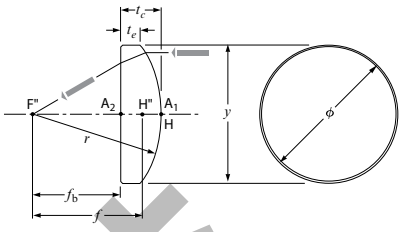

Round cylindrical plano-convex lens

Specifications

Product Code: CLCX-UV

Optical Material:
Standard Grade Corning 7980 1-D (Fused Silica)

Design Wavelength: 248nm

Dimensional Tolerance: +0/-0.25mm

Thickness Tolerance: ±0.25mm

Radius of Curvature Tolerance: ±0.5%

Chamfer: 0.35mm leg width at 45° nominal

Wedge: ≤ 3 arc minutes

Surface Quality: 20-10 scratch-dig per MIL-PRF-13830b

Surface Figure:
Cylindrical side: < 1.0 λ (y-axis),
< 1.0 λ/cm (x-axis), p-v at 633nm
Plano side: < λ/4 p-v at 633nm

Clear Aperture (CA): ≥ 85% of central dimension

Anti-reflection Coating: Wavelength user specified
Narrowband: R ≤ 0.25% per surface
Broadband: R_{avg} ≤ 0.5% per surface
Dualband: R ≤ 0.3% at 1064, R ≤ 0.6% at 532 per surface

Damage Threshold: 10 J/cm², 20ns, 20Hz at 1064nm

BUILD YOUR PART NUMBER

STEP-1	STEP-2
PRODUCT CODE	WAVELENGTH OF AR COATING (nm) for uncoated leave blank
CLCX-25.4-25.4-UV	193

EXAMPLE: CLCX-25.4-25.4-UV - 193

CHOOSE FROM THE OPTIONS BELOW.

1. PRODUCT CODE - SEE TABLE BELOW

2. WAVELENGTH OF AR COATING (nm); for uncoated leave blank

193	355-532	633-1064	1050-1600
248	400	700-900	1064/532
248-355	415-700	800	1550
266	532	1030	
355	633	1064	

Please see page T-31 for Anti-Reflective Coating Traces.

LASER GRADE FUSED SILICA ROUND CYLINDRICAL PLANO-CONVEX LENSES

f (mm)	Ø (mm)	r (mm)	t_c (mm)	t_e (mm)	f/#	f_b (mm)	PRODUCT CODE
30.0	25.4	15.3	11.0	4.2	1.4	23.0	CLCX-25.4-15.3-UV
50.0	25.4	25.4	7.4	4.0	2.3	45.3	CLCX-25.4-25.4-UV
60.0	25.4	30.5	7.0	4.2	2.8	55.5	CLCX-25.4-30.5-UV
75.0	25.4	38.1	6.2	4.0	3.5	71.0	CLCX-25.4-38.1-UV
100.0	25.4	50.9	5.6	4.0	4.6	96.4	CLCX-25.4-50.9-UV
100.0	50.8	50.9	10.0	3.2	2.3	93.6	CLCX-50.8-50.9-UV
150.0	25.4	76.3	5.1	4.0	6.9	146.7	CLCX-25.4-76.3-UV
150.0	50.8	76.3	8.0	3.6	3.5	144.9	CLCX-50.8-76.3-UV

波威科技

LASER GRADE FUSED SILICA RECTANGULAR CYLINDRICAL PLANO-CONCAVE LENSES: RCC-UV

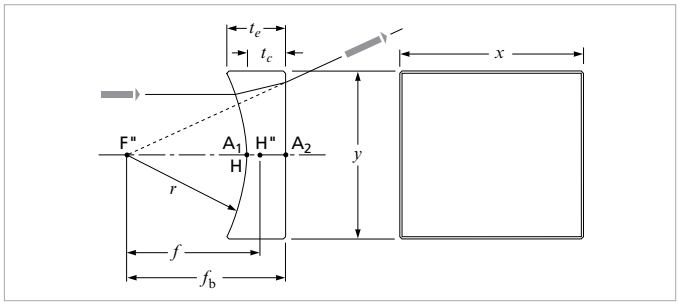

Laser grade rectangular cylindrical plano-concave lens

Specifications

Product Code: RCC-UV

Optical Material:
Standard Grade Corning 7980 1-D (Fused Silica)

Design Wavelength: 248nm

Dimensional Tolerance: +0/-0.25mm

Thickness Tolerance: ±0.25mm

Radius of Curvature Tolerance: ±0.5%

Chamfer: 0.35mm leg width at 45° nominal

Wedge: ≤ 3 arc minutes

Surface Quality: 20-10 scratch-dig per MIL-PRF-13830b

Surface Figure:
Cylindrical side: < 1.0 λ (y-axis),
< 1.0 λ/cm (x-axis), p-v at 633nm
Plano side: < λ/4 p-v at 633nm

Clear Aperture (CA): ≥ 85% of central dimension

Anti-reflection Coating: Wavelength user specified
Narrowband: R ≤ 0.25% per surface
Broadband: R_{avg} ≤ 0.5% per surface
Dualband: R ≤ 0.3% at 1064, R ≤ 0.6% at 532 per surface

Damage Threshold: 10 J/cm2, 20ns, 20Hz at 1064nm

BUILD YOUR PART NUMBER

STEP-1	STEP-2
PRODUCT CODE	WAVELENGTH OF AR COATING (nm) for uncoated leave blank
RCC-40.0-25.4-25.4-UV	633

EXAMPLE: RCC-40.0-25.4-25.4-UV - 633

CHOOSE FROM THE OPTIONS BELOW.

1. PRODUCT CODE - SEE TABLE BELOW

2. WAVELENGTH OF AR COATING (nm); for uncoated leave blank

193	355-532	633-1064	1050-1600
248	400	700-900	1064/532
248-355	415-700	800	1550
266	532	1030	
355	633	1064	

Please see page T-31 for Anti-Reflective Coating Traces.

LASER GRADE FUSED SILICA RECTANGULAR CYLINDRICAL PLANO-CONCAVE LENSES

f (mm)	x (mm)	y (mm)	r (mm)	t_c (mm)	t_e (mm)	f/#	f_b (mm)	PRODUCT CODE
–10.0	12.7	6.4	5.1	2.0	3.0	–1.8	–11.3	RCC-12.7-6.4-5.1-UV
–12.7	12.7	6.4	6.5	4.0	4.8	–2.3	–15.3	RCC-12.7-6.4-6.5-UV
–20.0	25.0	15.0	10.2	2.8	6.0	–1.6	–21.8	RCC-25.0-15.0-10.2-UV
–25.0	40.0	20.0	12.7	4.2	9.0	–1.5	–27.7	RCC-40.0-20.0-12.7-UV
–30.0	25.0	15.0	15.3	3.1	5.0	–2.4	–32.0	RCC-25.0-15.0-15.3-UV
–40.0	40.0	25.4	20.3	4.6	9.0	–1.9	–42.9	RCC-40.0-25.4-20.3-UV
–50.0	40.0	25.4	25.4	5.0	8.4	–2.3	–53.2	RCC-40.0-25.4-25.4-UV
–75.0	40.0	25.4	38.1	5.0	7.2	–3.5	–78.2	RCC-40.0-25.4-38.1-UV
–100.0	40.0	25.4	50.9	5.0	6.6	–4.6	–103.2	RCC-40.0-25.4-50.9-UV
–200.0	40.0	25.4	101.7	5.0	5.8	–9.3	–203.2	RCC-40.0-25.4-101.7-UV
–250.0	40.0	25.4	127.1	5.0	5.6	–11.6	–253.2	RCC-40.0-25.4-127.1-UV
–300.0	40.0	25.4	152.6	5.0	5.5	–13.9	–303.2	RCC-40.0-25.4-152.6-UV
–400.0	40.0	25.4	203.4	5.0	5.4	–18.5	–403.2	RCC-40.0-25.4-203.4-UV
–500.0	40.0	25.4	254.3	5.0	5.3	–23.2	–503.2	RCC-40.0-25.4-254.3-UV
–1000.0	40.0	25.4	508.6	5.0	5.2	–46.3	–1003.2	RCC-40.0-25.4-508.6-UV

客服微信
液威科技

LASER GRADE N-BK7 SQUARE CYLINDRICAL PLANO-CONCAVE LENSES: SCC-C

Other focal lengths and dimensions available. Contact us for pricing and delivery details.

- Anamorphic beam shaping and laser projection
- Illumination of detector arrays
- Low loss, high energy AR coatings

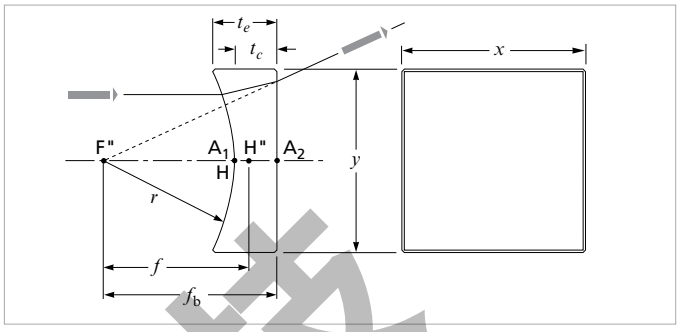

Laser grade square cylindrical plano-concave lens

Specifications

Product Code: SCC-C

Optical Material: N-BK7

Dimensional Tolerance: +0/-0.25mm

Thickness Tolerance: ±0.25mm

Radius of Curvature Tolerance: ±0.5%

Chamfer: 0.35mm leg width at 45° nominal

Wedge: ≤ 3 arc minutes

Surface Quality: 20-10 scratch-dig per MIL-PRF-13830b

Surface Figure:
Cylindrical side: < 1.0 λ (y-axis),
< 1.0 λ/cm (x-axis), p-v at 633nm
Plano side: < λ/4 p-v at 633nm

Clear Aperture (CA): ≥ 85% of central dimension

Anti-reflection Coating: Wavelength user specified
Narrowband: R ≤ 0.25% per surface
Broadband: R_{avg} ≤ 0.5% per surface
Dualband: R ≤ 0.3% at 1064, R ≤ 0.6% at 532 per surface

Damage Threshold: 10 J/cm², 20ns, 20Hz at 1064nm

BUILD YOUR PART NUMBER	
STEP-1	STEP-2
PRODUCT CODE	WAVELENGTH OF AR COATING (nm) for uncoated leave blank
SCC-50.8-50.9-C	800
EXAMPLE: SCC-50.8-50.9-C - 800	

CHOOSE FROM THE OPTIONS BELOW TO BUILD YOUR PART

1. PRODUCT CODE - SEE TABLE BELOW

2. WAVELENGTH OF AR COATING (nm); for uncoated leave blank			
400	633	800	1050-1600
415-700	633-1064	1030	1064/532
532	700-900	1064	1550

Please see page T-31 for Anti-Reflective Coating Traces.

LASER GRADE N-BK7 SQUARE CYLINDRICAL PLANO-CONCAVE LENSES

f (mm)	x = y (mm)	r (mm)	t_c (mm)	t_e (mm)	f/#	f_b (mm)	PRODUCT CODE
–30.0	20.0	15.3	4.3	8.0	–1.8	–32.8	SCC-20.0-15.3-C
–60.0	25.4	30.5	4.3	7.0	–2.8	–62.8	SCC-25.4-30.5-C
–75.0	50.8	38.1	8.0	17.6	–1.7	–80.3	SCC-50.8-38.1-C
–100.0	50.8	50.9	8.0	14.7	–2.3	–105.3	SCC-50.8-50.9-C
–250.0	50.8	127.1	6.0	8.5	–5.8	–254.0	SCC-50.8-127.1-C
–400.0	20.0	203.4	3.8	4.0	–23.5	–402.5	SCC-20.0-203.4-C
–500.0	20.0	254.3	3.9	4.0	–29.4	–502.6	SCC-20.0-254.3-C
–500.0	50.8	254.3	6.0	7.3	–11.6	–504.0	SCC-50.8-254.3-C
–1000.0	20.0	508.6	3.9	4.0	–58.8	–1002.6	SCC-20.0-508.6-C

波威科技

LASER GRADE FUSED SILICA SQUARE CYLINDRICAL PLANO-CONCAVE LENSES: SCC-UV

BUILD YOUR PART NUMBER

STEP-1	STEP-2
PRODUCT CODE	WAVELENGTH OF AR COATING (nm) for uncoated leave blank
SCC-25.4-152.6-UV	355

EXAMPLE: SCC-25.4-152.6-UV - 355

Specifications

Product Code: SCC-UV

Optical Material:
Standard Grade Corning 7980 1-D (Fused Silica)

Design Wavelength: 248nm

Surface Quality: 20-10 scratch-dig per MIL-PRF-13830b

Dimensional Tolerance: +0/-0.25mm

Thickness Tolerance: ±0.25mm

Radius of Curvature Tolerance: ±0.5%

Chamfer: 0.35mm leg width at 45° nominal

Wedge: ≤ 3 arc minutes

Surface Figure: **Cylindrical side:** < 1.0 λ (y-axis), < 1.0 λ/cm (x-axis), p-v at 633nm
Plano side: < λ/4 p-v at 633nm

Clear Aperture (CA): ≥ 85% of central dimension

Damage Threshold: 10 J/cm², 20ns, 20Hz at 1064nm

CHOOSE FROM THE OPTIONS BELOW.

1. PRODUCT CODE - SEE TABLE BELOW

2. WAVELENGTH OF AR COATING (nm); for uncoated leave blank

193	355-532	633-1064	1050-1600
248	400	700-900	1064/532
248-355	415-700	800	1550
266	532	1030	
355	633	1064	

Please see page T-31 for Anti-Reflective Coating Traces.

波威科技

LASER GRADE FUSED SILICA SQUARE CYLINDRICAL PLANO-CONCAVE LENSES

f (mm)	x = y (mm)	r (mm)	t_c (mm)	t_e (mm)	f/#	f_b (mm)	PRODUCT CODE
–20.0	15.0	10.2	2.8	6.0	–1.6	–21.9	SCC-15.0-10.2-UV
–25.0	12.7	12.7	3.7	5.4	–2.3	–27.5	SCC-12.7-12.7-UV
–40.0	25.4	20.3	4.6	9.0	–1.9	–42.9	SCC-25.4-20.3-UV
–50.0	25.4	25.4	5.0	8.4	–2.3	–53.2	SCC-25.4-25.4-UV
–60.0	25.4	30.5	4.3	7.0	–2.8	–62.8	SCC-25.4-30.5-UV
–75.0	25.4	38.1	5.0	7.2	–3.5	–78.2	SCC-25.4-38.1-UV
–100.0	25.4	50.9	5.0	6.6	–4.6	–103.2	SCC-25.4-50.9-UV
–100.0	50.8	50.9	8.0	14.7	–2.3	–105.1	SCC-50.8-50.9-UV
–125.0	25.4	63.6	5.0	6.3	–5.8	–128.2	SCC-25.4-63.6-UV
–150.0	20.0	76.3	3.4	4.0	–8.8	–152.2	SCC-20.0-76.3-UV
–200.0	25.4	101.7	5.0	5.8	–9.3	–203.2	SCC-25.4-101.7-UV
–250.0	25.4	127.1	5.0	5.6	–11.6	–253.2	SCC-25.4-127.1-UV
–300.0	25.4	152.6	5.0	5.5	–13.9	–303.2	SCC-25.4-152.6-UV
–500.0	25.4	254.3	5.0	5.3	–23.2	–503.2	SCC-25.4-254.3-UV
–500.0	50.8	254.3	6.0	7.3	–11.6	–503.8	SCC-50.8-254.3-UV
–750.0	25.4	381.4	5.0	5.2	–34.7	–753.2	SCC-25.4-381.4-UV
–750.0	50.8	381.4	6.0	6.8	–17.4	–753.8	SCC-50.8-381.4-UV
–1000.0	25.4	508.6	5.0	5.2	–46.3	–1003.2	SCC-25.4-508.6-UV
–1000.0	50.8	508.6	6.0	6.6	–23.2	–1003.8	SCC-50.8-508.6-UV
–2000.0	50.8	1000.0	6.0	6.3	–46.3	–2003.8	SCC-50.8-1000.0-UV
–10000.0	50.8	5000.0	6.0	6.1	–231.6	–10003.8	SCC-50.8-5000.0-UV

LASER GRADE FUSED SILICA ROUND CYLINDRICAL PLANO-CONCAVE LENSES: CLCC-UV

Other focal lengths and dimensions available. Contact us for pricing and delivery details.

- Anamorphic beam shaping and laser projection
- Illumination of detector arrays
- Low loss, high energy AR coatings

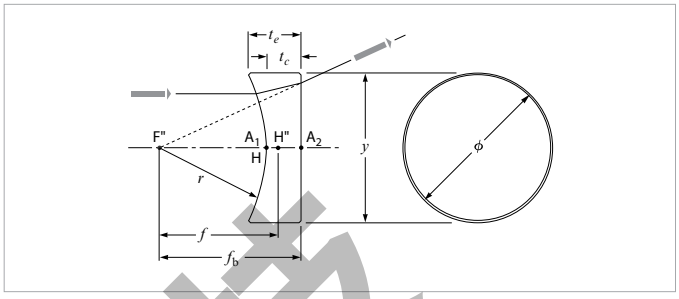

Laser grade round cylindrical plano-concave lens

Specifications

Product Code: CLCC-UV

Optical Material:
Standard Grade Corning 7980 1-D (Fused Silica)

Design Wavelength: 248nm

Dimensional Tolerance: +0/-0.25mm

Thickness Tolerance: ±0.25mm

Radius of Curvature Tolerance: ±0.5%

Chamfer: 0.35mm leg width at 45° nominal

Wedge: ≤ 3 arc minutes

Surface Quality: 20-10 scratch-dig per MIL-PRF-13830b

Surface Figure
Cylindrical side: < 1.0 λ (y-axis),
< 1.0 λ/cm (x-axis), p-v at 633nm
Plano side: < λ/4 p-v at 633nm

Clear Aperture (CA): ≥ 85% of central dimension

Anti-reflection Coating: Wavelength user specified
Narrowband: R ≤ 0.25% per surface
Broadband: R_{avg} ≤ 0.5% per surface
Dualband: R ≤ 0.3% at 1064, R ≤ 0.6% at 532 per surface

Damage Threshold: 10 J/cm², 20ns, 20Hz at 1064nm

BUILD YOUR PART NUMBER

STEP-1	STEP-2
PRODUCT CODE	WAVELENGTH OF AR COATING (nm) for uncoated leave blank
CLCC-25.4-38.1-UV	193

EXAMPLE: CLCC-25.4-38.1-UV - 193

CHOOSE FROM THE OPTIONS BELOW.

1. PRODUCT CODE - SEE TABLE BELOW

2. WAVELENGTH OF AR COATING (nm); for uncoated leave blank

193	355-532	633-1064	1050-1600
248	400	700-900	1064/532
248-355	415-700	800	1550
266	532	1030	
355	633	1064	

Please see page T-31 for Anti-Reflective Coating Traces.

LASER GRADE FUSED SILICA ROUND CYLINDRICAL PLANO-CONCAVE LENSES

f (mm)	Ø (mm)	r (mm)	t_c (mm)	t_e (mm)	f/#	f_b (mm)	PRODUCT CODE
–25.0	20.0	12.7	4.2	9.1	–1.5	–27.7	CLCC-20.0-12.7-UV
–40.0	25.4	20.3	4.6	9.1	–1.9	–43.1	CLCC-25.4-20.3-UV
–50.0	25.4	25.4	5.0	8.4	–2.3	–53.2	CLCC-25.4-25.4-UV
–75.0	25.4	38.1	5.0	7.2	–3.5	–78.2	CLCC-25.4-38.1-UV
–150.0	25.4	76.3	5.0	6.1	–6.9	–153.2	CLCC-25.4-76.3-UV

波威科技

客服微信

OEM Optical Mechanical Sub As

CVI Laser Optics has supported the following markets with precision optical assemblies for over 40 years. We specialize in vertical integration of optical component manufacturing and mechanical system integration to provide a plug and play optical box for your OEM needs. Experience with optical systems ranging from deep UV to NIR.

Semiconductor • Industrial • Defense • Medical

- 10,000+ square feet of clean room environment for optical assembly
- Experience duplicating customers' acceptable test procedure to ensure functionality
- Over 40 years of optics experience
- Quick ramp up for OEM volumes
- Various laser wavelength testing capabilities
- Electrical and actuator integration with firmware testing capabilities
- In house environmental testing capabilities for optical components

Please give us a call and we will be honored to assist you with your custom OEM system integration needs.

波威科技